TSI1200

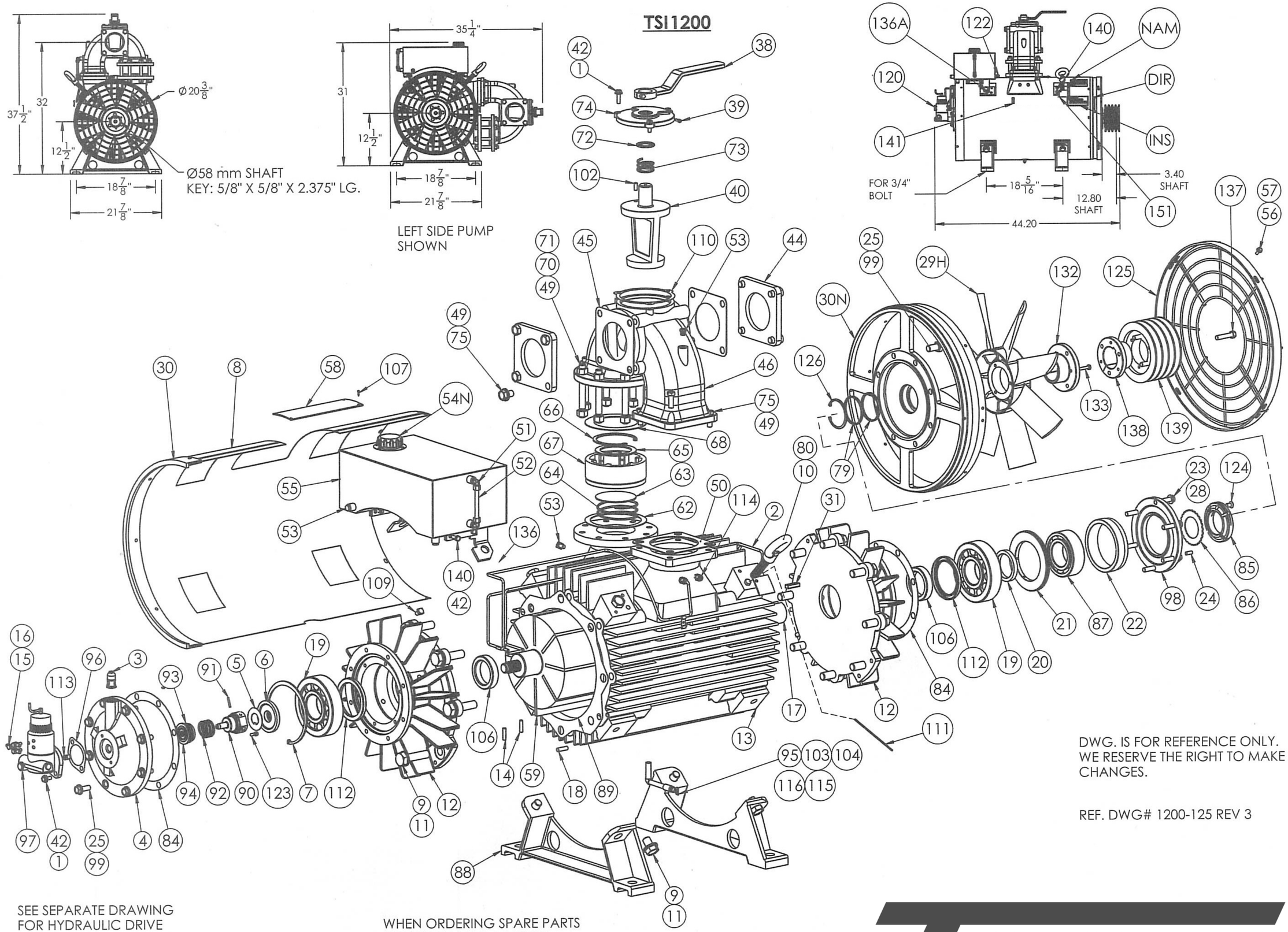

SEE SEPARATE DRAWING FOR HYDRAULIC DRIVE SET UP PUMPS 1200-HYD.

WHEN ORDERING SPARE PARTS STATE SERIAL NO & MODEL.

DWG. IS FOR REFERENCE ONLY. WE RESERVE THE RIGHT TO MAKE CHANGES.

REF. DWG# 1200-125 REV 3

TRANSWAY SYSTEMS INC.